THIS DOCUMENT AND THE DATA DISCLOSED HE
HEREWITH IS THE PROPERTY OF ALTIUM LIMIT
BE FREELY DISTRIBUTED IN WHOLE. NO RIGHT
RESERVED OR EXPRESS OR IMPLIED WARANT

in+ -> shunt/current
in- -> vref or limit
reference from DAC

REVISION	DESCRIPTION	DATE	APPROVED

DWG. NO. | REV | SHT. 1

Top-Level[4C], ADC+DAC[3E] — I_SET — I_SET
Top-Level[4D], STM32[4F] — OFF — $\overline{OFF}$

SR Latch logic may be iffy

PC817 octocoupler? allow load to be triggered externally (iso-input)

Power-up:12 V rail powers op-amps and MOSFETs.5 V rail powers MCU, ADC, and peripherals.The negative rail (-5 V) gives op-amps full range control.
Set current:User enters a current (e.g., 2 A) via keypad or PC command.MCU sets an analog control voltage (I_SET).

Feedback control:Op-amps drive MOSFET gates to make the shunt voltage equal I_SET.Current is held constant regardless of DUT voltage.

Measurement:ADC continuously reads shunt voltages and input voltage.MCU calculates and displays I, V, and P on LCD.

Protection:If temperature rises, fan engages.If over-temp or over-current, MCU disables BJTs (Q8–Q11), shutting off MOSFETs.

Power Stages

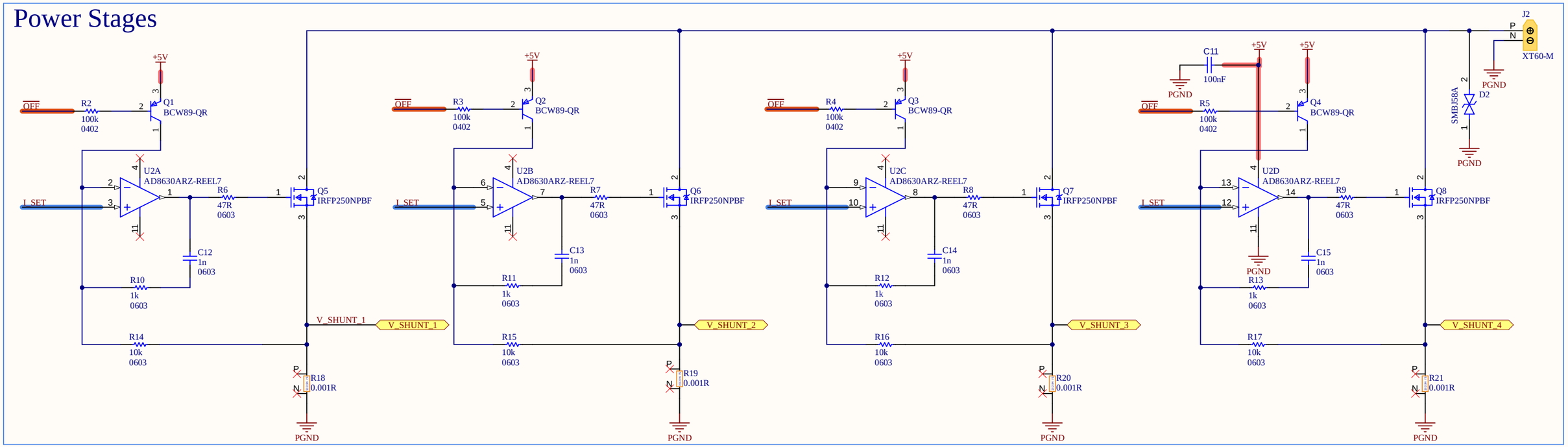

VOLTAGE REFERENCE

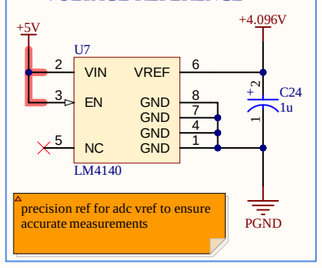

precision ref for adc vref to ensure accurate measurements

APPROVALS	DATE
ENG: *	
DSN: *	
CHK: *	
REFERENCE DOCUMENTS	
BOM:	
ASSY DWG:	
FAB DWG:	
PCB DWG:	

Schematic Changes:
- Tie VDDA to 3.3 V through a bead + decoupling; follow STM32 analog layout guide.
- Separate AGND/DGND star point near STM32 if you bring analog in.

For PWM -> RC for I_SET replace with DACout -> I_SET (pure analog)

Remote V-sense precision buffer amplifier. Basically when you test batteries/PSU theres v-drop in load wires. this would measure acutal voltage directly at DUT terminals

Version control disabled Version control disabled

NAME Power.SchDoc | SHEET 1 OF 1

THIS DOCUMENT AND THE DATA DISCLOSED HEREIN OR HEREWITH IS THE PROPERTY OF ALTIUM LIMITED AND MAY BE FREELY DISTRIBUTED IN WHOLE. NO RIGHTS ARE RESERVED OR EXPRESS OR IMPLIED WARANTEE GIVEN.

REVISION	DESCRIPTION	DATE	APPROVED

DAC

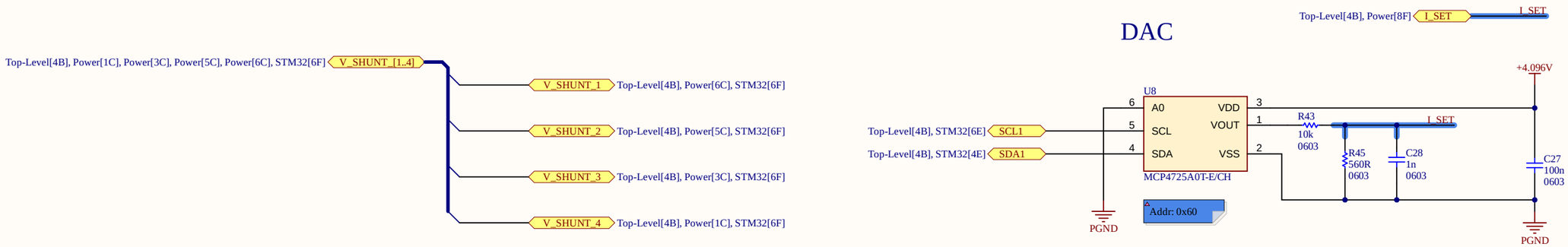

It might make more sense to instead of using this external single ended ADC (which doesnt seem to have enough inputs to let you connect each shunt line separately), either
use the STM32's ADC (use differential measurements, not single ended) and then make sure your shunt traces are impedance controlled and length matched as they are routed to the STM32
or find an external differential ADC that can support 5 differential measurement channels (or find one that can do a few and just use multiple of them) and connect to the shunt lines and VOLT
For shunts we should always try to use differential measurements because they are less noisy than single ended measurements. The same thing applies with measuring voltage using a differential probe versus a standard single ended scope probe with a GND clip
I dont know if you have STM32CubeIDE but Id recommend getting it so that you can create a project with an .ioc file and set the pinout. No need to look through the datasheet for pin functions just select it in the menu
you can find differential adc pins
If the resolution is 12-bit then thats enough to do vsense, worst case we can do digital LPF if we are still getting significant noise on our readings

You will not need an ADS1115 since ~14-15 bits via STM32 oversampling/filtering, therefore you can delete the ADS1115 and feed the shunt and VOLTAGE+ into the STM32 ADC (with proper scaling)

If you absolutely need low-noise 16-bit readings then keep the ADS1115 and run it at 3.3V

place comparator at output of shunt amp

- need to create a reference threshold V_trip meaning a simple resistor divider from a reference but do that on the DAC if I want a programmable trip
- so therefore the comparator compares the IN+ = current signal, IN- = V_trip (so it should trip when the current is greater than the limit)

- how to kill the load when the comp trips it should force the MOSFET gates OFF regardless of op-amp command. -> comp out -> NMOS that clamps AD8630 output nodes(s) to ground

add hysteriesis

A) The control loop (makes the current constant)

Your op-amp compares the shunt voltage to I_SET and drives the MOSFET gates (that's the heart of the load).

eload-schematics

For that loop, you often don't need a dedicated "current sense amplifier" because the op-amp is already acting on the shunt voltage.

B) The measurement loop (reports current/voltage/power accurately)

If your shunt drop is only 10–50 mV, the MCU ADC may struggle to measure it accurately without gain/CMRR.

So you have three good options:

Amplify shunt with an op-amp into the ADC (gain 20–100×), careful with offset + drift.

Use a dedicated current shunt monitor like INA226 (digital readout of shunt V + bus V over I²C). The INA226 explicitly monitors shunt drop and bus voltage and can compute current and power.
Texas Instruments
+1

Use an external higher-res ADC (you already have ADS1115 in the reference design, but you also mentioned switching plans).

Important: INA226 does not replace your DAC

INA226 is measurement, not a setpoint generator. Your DAC (MCP4725) is what creates I_SET in your schematic.

eload-schematics

So: INA226 does not replace DAC; it replaces (or improves) your current/voltage measurement chain.

8) "RESET" and "FAULT/STOP": where do they go (and what MCU pins)?

Treat them as two nets:

FAULT (latched hardware fault)

Comes from comparator → SR latch output.

Goes to:

Hard disable: kills gate drive (GATE_DISABLE into the BJT/op-amp stage enable)

MCU input: any GPIO with EXTI interrupt (so firmware can immediately log & stop profiles)

RESET

Drives SR latch reset input.

Also optionally drives MCU reset pin (or just the MCU can reset the latch via a GPIO).

Rule: Hardware fault shutdown must work even if the MCU is dead. The MCU only observes and records.

For the RTC you can use the STM32 RTC + 32.768 kHz crystal and coin cell (VBAT pin). If you want I2C based timekeeping or battery backed ala

APPROVALS	DATE
ENG: *	
DSN: *	
CHK: *	
REFERENCE DOCUMENTS	
BOM:	
ASSY DWG:	
FAB DWG:	
PCB DWG:	

PROJECT: Altium ™ * * * *

PROJECT REVISION: Version control disabled | DOCUMENT REVISION: Version control disabled | DESIGN ITEM:

TITLE: Power

SIZE	CAGE CODE	DWG NO.	REV
B			

SCALE: | FILE NAME: ADC+DAC.SchDoc | SHEET * OF *

THIS DOCUMENT AND THE DATA DISCLOSED HEREIN OR HEREWITH IS THE PROPERTY OF ALTIUM LIMITED AND MAY BE FREELY DISTRIBUTED IN WHOLE. NO RIGHTS ARE RESERVED OR EXPRESS OR IMPLIED WARANTEE GIVEN.

REVISION	DESCRIPTION	DATE	APPROVED

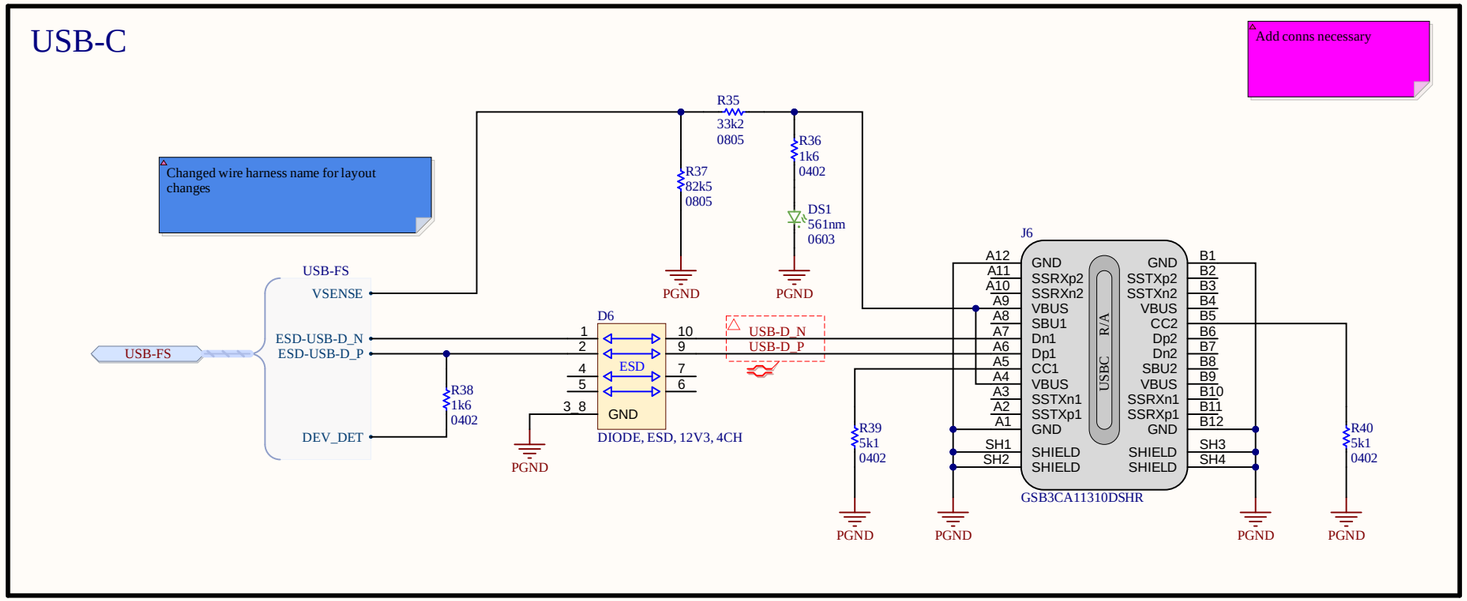

APPROVALS	DATE
ENG: *	
DSN: *	
CHK: *	

REFERENCE DOCUMENTS

BOM:

ASSY DWG:

FAB DWG:

PCB DWG:

PROJECT

Altium™

PROJECT REVISION: Version control disabled | DOCUMENT REVISION: | DESIGN ITEM: Version control disabled

TITLE

Power

SIZE	CAGE CODE	DWG NO.	REV
B			

SCALE: | FILE NAME Connectors.SchDoc | SHEET * OF *

THIS DOCUMENT AND THE DATA DISCLOSED HEREIN OR HEREWITH IS THE PROPERTY OF ALTIUM LIMITED AND MAY BE FREELY DISTRIBUTED IN WHOLE. NO RIGHTS ARE RESERVED OR EXPRESS OR IMPLIED WARANTEE GIVEN.

REVISION	DESCRIPTION	DATE	APPROVED

PWR in FET is 4V * 0.5A = 2W
HSS-B20-0635H-02: 2.6 W @ 75 °C rise" ⇒ 75 / 2.6 ≈ 28.8 °C/W
BD911: RθJA ≈ 31 °C/W
ΔV≈16 – 12= 4V
PBD911 ≈ 4 V*0.5 A= 2W
don't try to pull way more than ~0.5 A @ 12 V from that linear stage

POWER SUPPLY

120VAC → +12V → + 5V

Primary: 115VAC --> Secondary: 12.6VAC RMS, 800mA max (10VA)
12.6 * sqrt(2) ≈ 17.8V
V_dc = 17.8V - 1V = 16.8V \\ since diode rated @ 40VRRM, <50% of voltage rating

P_bridge = 2 * V_f * I_dc, where V_f = 0.5V
P_bridge = 2*0.5*0.5 = 0.5W
I_dc_max = 0.62*0.8 = 0.5A --> about 12V @ 0.5A DC max = 6W DC out

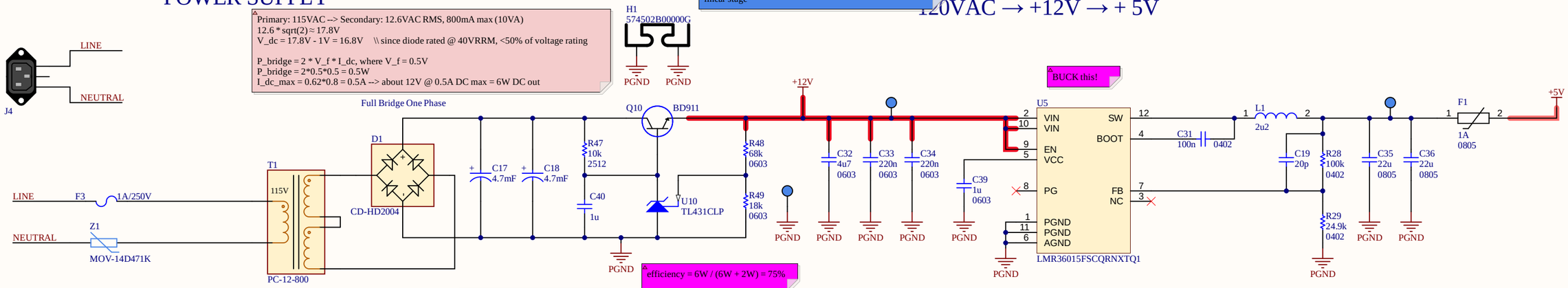

BUCK this!

efficiency = 6W / (6W + 2W) = 75%

4.7mF beefy caps so that the LM1117 doesn't get obliterated LOL

J4 connected to a wall outlet therefore full bridge rectifier needed

+5V → + 3V3

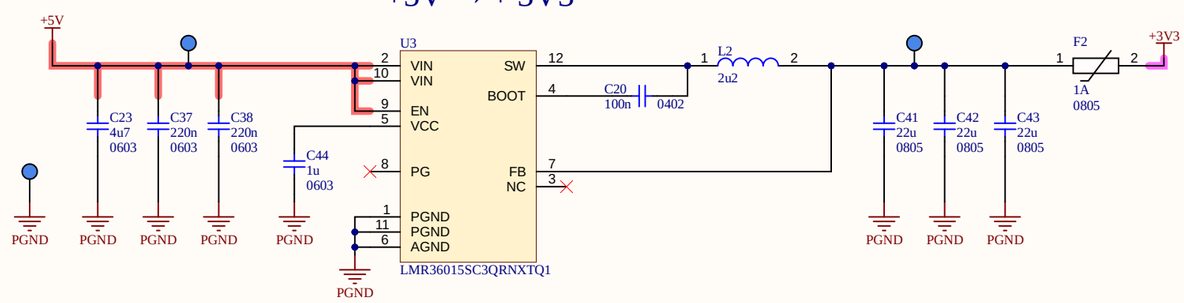

- Add TVS diode (SSA210)
- Add 10-100Ohm in series @ each gate pin to tame the ringing
- Temperature sensing -> one NTC on MOSFET heatsink and one near the shunts
- Feed into ADC channels and implement -> over-temp shutdown and fan speed control
- low-side N-MOSFET to PWM a 12V fan controlled by MCU also add a flyback diode is its a 2wire brushed fan
-input reverse polarity protection to prevent human plugging that bih so use BIG SCHOTTKY in series or a fuse on the XT60 input

APPROVALS	DATE
ENG: *	
DSN: *	
CHK: *	
REFERENCE DOCUMENTS	
BOM:	
ASSY DWG:	
FAB DWG:	
PCB DWG:	

PROJECT: Altium
PROJECT REVISION: Version control disabled
DOCUMENT REVISION: Version control disabled
DESIGN ITEM:
TITLE: Power
SIZE: B
CAGE CODE
DWG NO.
REV
SCALE:
FILE NAME: Power-Tree.SchDoc
SHEET * OF *

THIS DOCUMENT AND THE DATA DISCLOSED HEREIN OR HEREWITH IS THE PROPERTY OF ALTIUM LIMITED AND MAY BE FREELY DISTRIBUTED IN WHOLE. NO RIGHTS ARE RESERVED OR EXPRESS OR IMPLIED WARANTEE GIVEN.

REVISION	DESCRIPTION	DATE	APPROVED

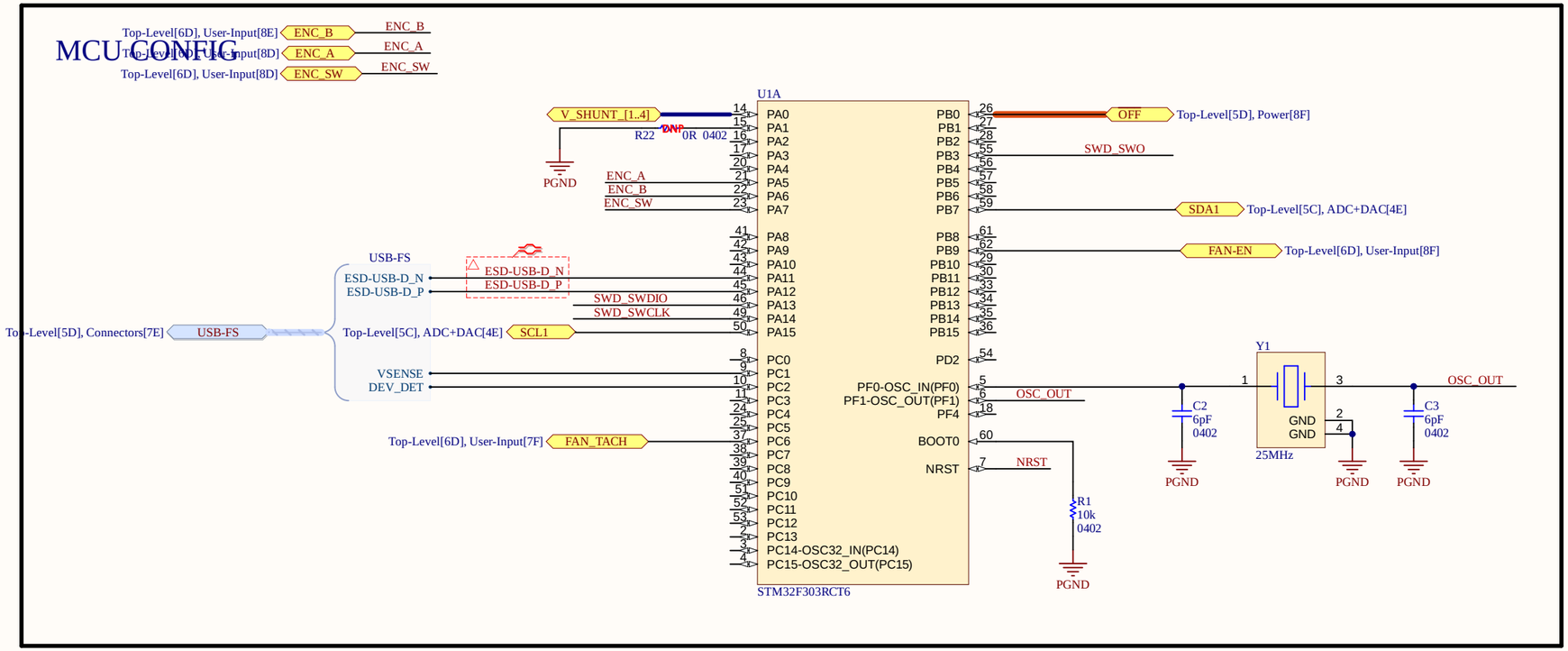

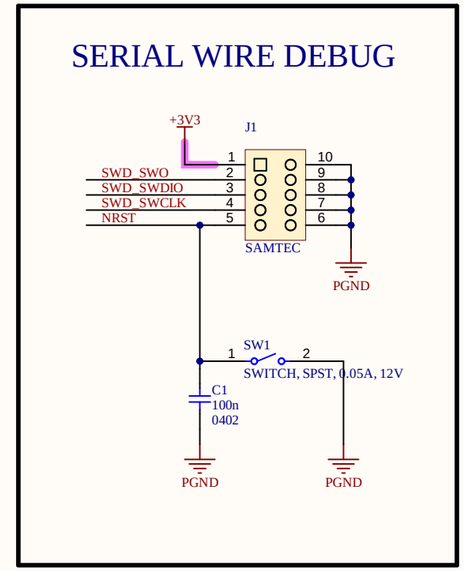

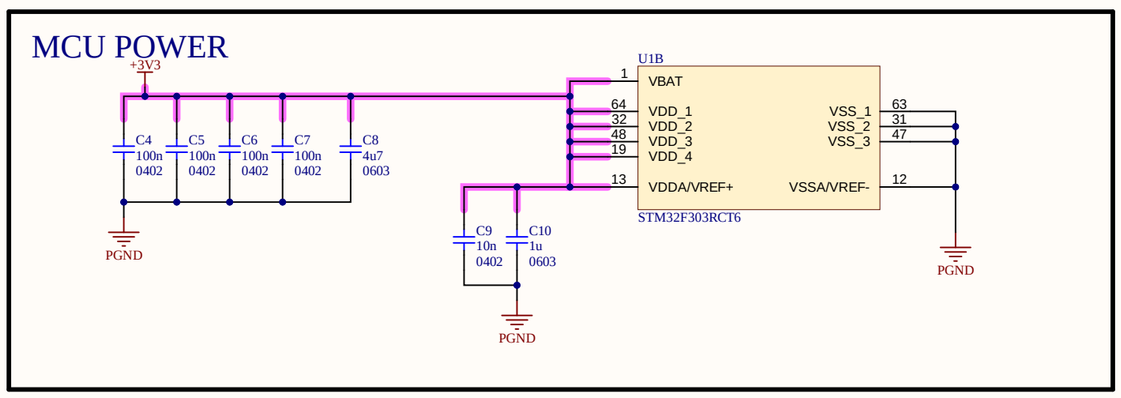

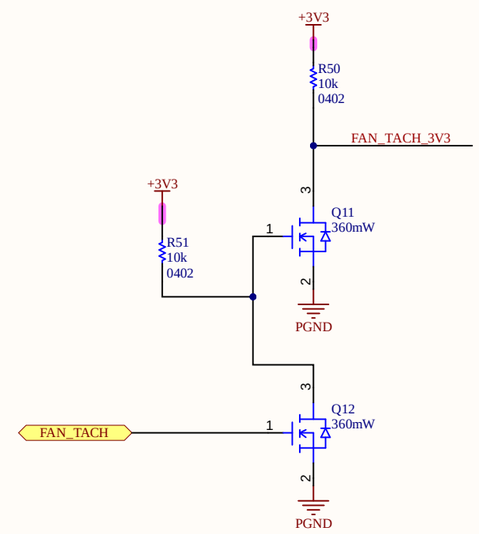

APPROVALS	DATE
ENG: *	
DSN: *	
CHK: *	
REFERENCE DOCUMENTS	
BOM:	
ASSY DWG:	
FAB DWG:	
PCB DWG:	

PROJECT: Altium

PROJECT REVISION: Version control disabled | DOCUMENT REVISION: Version control disabled | DESIGN ITEM:

TITLE: Power

SIZE: B | CAGE CODE | DWG NO. | REV

SCALE: | FILE NAME: STM32.SchDoc | SHEET * OF *

THIS DOCUMENT AND THE DATA DISCLOSED HEREIN OR HEREWITH IS THE PROPERTY OF ALTIUM LIMITED AND MAY BE FREELY DISTRIBUTED IN WHOLE. NO RIGHTS ARE RESERVED OR EXPRESS OR IMPLIED WARANTEE GIVEN.

REVISION	DESCRIPTION	DATE	APPROVED

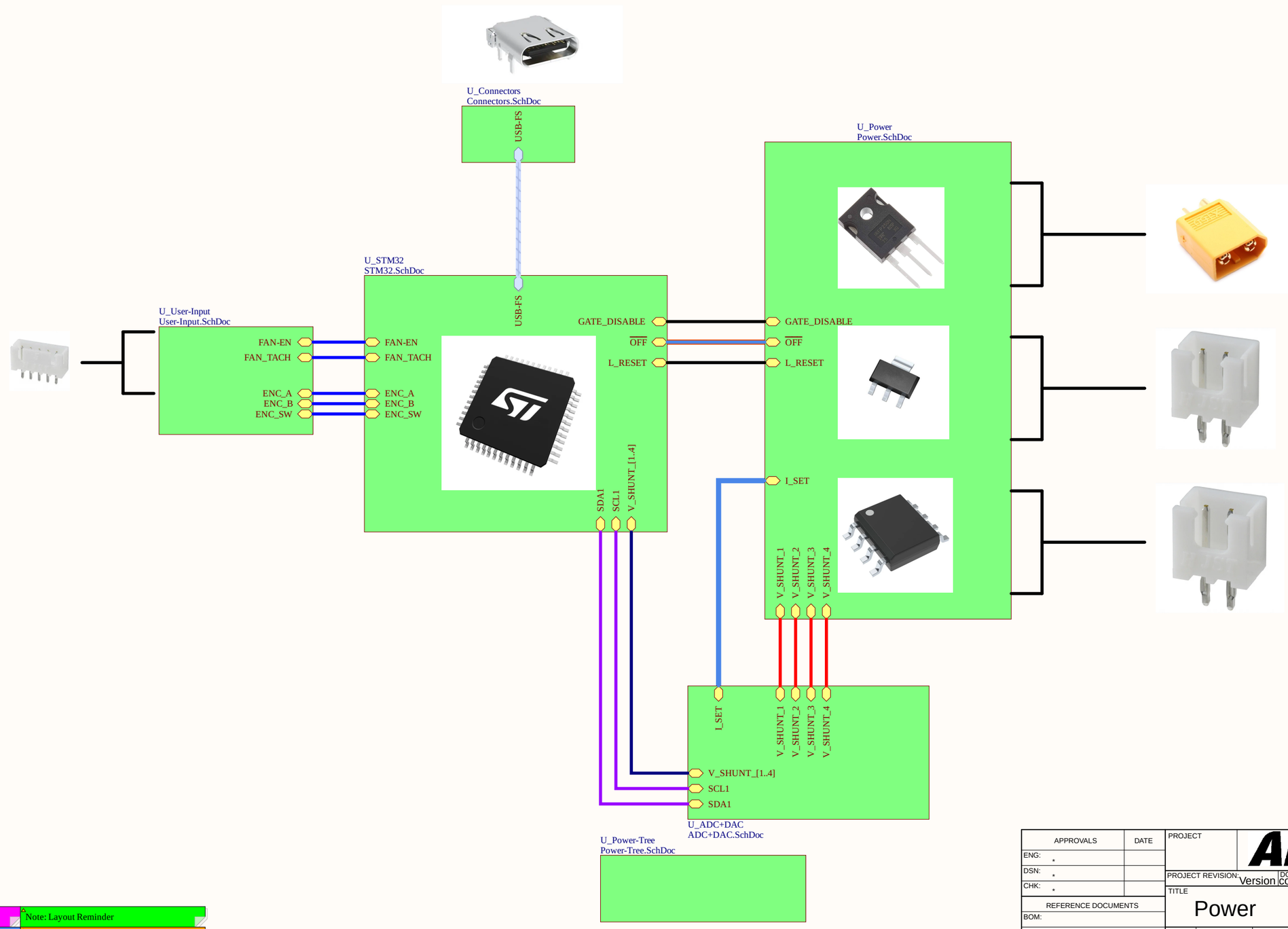

APPROVALS	DATE
ENG: *	
DSN: *	
CHK: *	

REFERENCE DOCUMENTS

BOM:

ASSY DWG:

FAB DWG:

PCB DWG:

PROJECT

PROJECT REVISION: Version control disabled | DOCUMENT REVISION: | DESIGN ITEM: Version control disabled

TITLE

Power

SIZE	CAGE CODE	DWG NO.	REV
B			

SCALE: | FILE NAME Top-Level.SchDoc | SHEET * OF *

- Note: Design/reminder ("TODO")
- Note: Design Note, General
- Note: Design Critical Parameter
- Note: Layout Reminder
- Note: Layout Necessary/Suggested
- Note: Layout Critical Parameter

THIS DOCUMENT AND THE DATA DISCLOSED HEREIN OR HEREWITH IS THE PROPERTY OF ALTIUM LIMITED AND MAY BE FREELY DISTRIBUTED IN WHOLE. NO RIGHTS ARE RESERVED OR EXPRESS OR IMPLIED WARANTEE GIVEN.

REVISION	DESCRIPTION	DATE	APPROVED

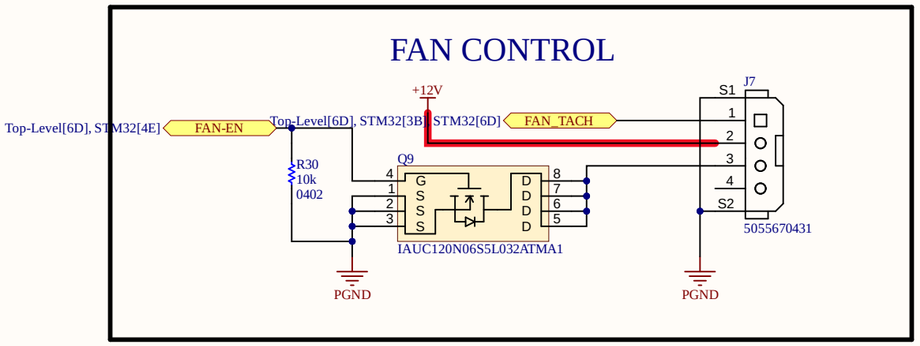

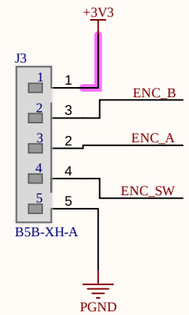

Top-Level[6D], STM32[7F] ENC_B — ENC_B
Top-Level[6D], STM32[7F] ENC_A — ENC_A
Top-Level[6D], STM32[7F] ENC_SW — ENC_SW

pot finish schematic logic config

- don't forget the add button matrix

APPROVALS	DATE
ENG: *	
DSN: *	
CHK: *	
REFERENCE DOCUMENTS	
BOM:	
ASSY DWG:	
FAB DWG:	
PCB DWG:	

PROJECT: Altium

PROJECT REVISION: Version control disabled | DOCUMENT REVISION: | DESIGN ITEM: Version control disabled

TITLE: Power

SIZE: B | CAGE CODE | DWG NO. | REV

SCALE: | FILE NAME: User-Input.SchDoc | SHEET * OF *